PHOTOELECTRIC ROTARY ENCODER

A24HME1

Small szie

Hollow shaft

Analog output signals

Photoelectric rotary encoder A24HME1 is the smallest diameter encoder in our product range. It can have a ø2-6mm hollow shaft depending on customer requirements and produces up to 250.000 output pulses per shaft revolution.

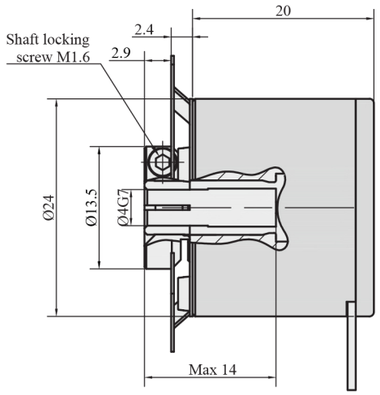

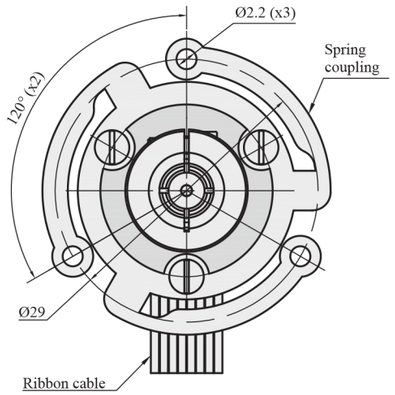

MOUNTING REQUIREMENTS

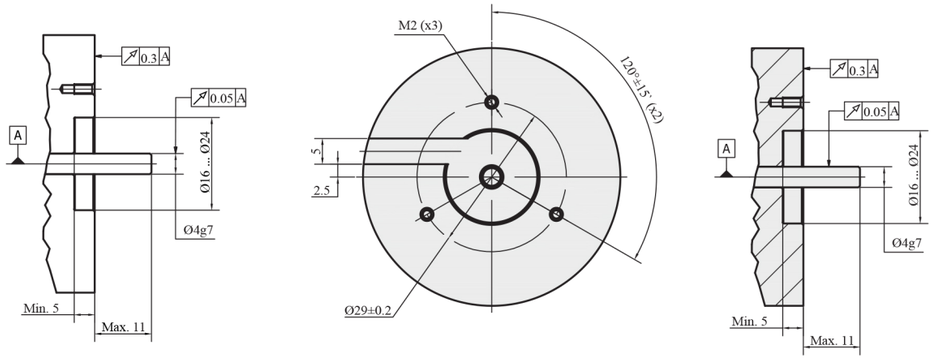

MECHANICAL DATA

Line number on disc (z)	250
Pulse number per shaft revolution	250, 500, 1000,1250, 2500, 5000, 6250, 10000, 12500, 25000, 31250, 50000, 62500, 125000, 250000
Maximum shaft speed	10000 rpm
Maximum shaft load: - axial - radial (at shaft end)	 5N 10N
Accuracy (T_1-period of lines on disc in arc. sec)	±260 arc. sec

Starting torque at 20°C	≤ 0.005 Nm
Rotor moment of inertia	< 1 gcm²
Protection (IEC 529)	IP54
Maximum weight without cable	0.04 kg
Operating temperature	-40...+85°C
Storage temperature	-40...+85°C
Maximum humidity (non-condensing)	98 %
Permissible vibration (55 to 2000 Hz)	≤ 100 m/s²
Permissible shock (11 ms)	≤ 300 m/s²

ELECTRICAL DATA

VERSION	A24HME1-AV ∿ 1 Vpp	A24HME1-F ⊓⊔ TTL; ⊓⊔ HTL
Supply voltage	+5 V ± 5%	+5 V ± 5%; +(10 to 30) V
Max. supply current (without load)	120 mA	120 mA
Light source	LED	LED
Incremental signals	Differential sine +A/-A and +B/-B Amplitude at 120 Ω load: - A = 0.6-1.2 V - B = 0.6-1.2 V	Differential square-wave U1/$\overline{U1}$ and U2/$\overline{U2}$. Signal levels at 20 mA load current: - low (logic "0") ≤ 0.5 V at U_P=+5 V - low (logic "0") ≤ 1.5 V at U_P=10 to 30 V - high (logic "1") ≥ 2.4 V at U_P=+5 V - high (logic "1") ≥ (U_P-2) V at U_P=10 to 30 V
Reference signal	One quasi-triangular +R and its complementary -R per revolution. Signals magnitude at 120W load - R = 0.2-0.8 V (usable component)	One differential square-wave U0/$\overline{U0}$ per revolution. Signal levels at 20 mA load current: - low (logic "0") < 0.5 V at U_P=+5 V - low (logic "0") < 1.5 V at U_P=10 to 30 V - high (logic "1") > 2.4 V at U_P=+5 V - high (logic "1") > (U_P-2) V at U_P=10 to 30 V
Maximum operating frequency	(-3 dB) ≥ 180 kHz	(160 x k) kHz, k-interpolation factor
Direction of signals	+B lags +A for clockwise rotation (viewed from shaft side)	U2 lags U1 with clockwise rotation (viewed from shaft side)
Maximum rise and fall time	-	< 0.5 µs
Standard cable length	1 m, without connector	1 m, without connector
Maximum cable length	25 m	25 m
Output signals	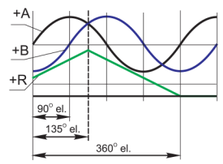	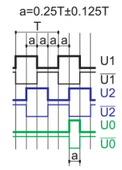

Note:

1. Maximum working rotation speed (with proper encoder counting) is limited by maximum operating frequency and maximum mechanical rotation speed.
2. If cable extension is used, power supply conductor cross-section should not be smaller than 0.5 mm²

ACCESSORIES

CONNECTORS FOR CABLE	C12 12-pin round connector	D9 9-pin flat connector

ORDER FORM

A24HME1 - X1 - X2 - X3 - X4 - X5/X6

Output signal Version (X1):	Pulse number Per revolution (X2):	Hollow shaft diameter (X3):	Supply Voltage (X4):	Cable length (X5):	Connector type (X6):
AV **F**	**250** ... **250000*** *only F signal version for >250 pulses	**2** - Ø 2 mm **3** - Ø 3 mm **4** - Ø 4 mm **5** - Ø 5 mm **6** - Ø 6 mm	**05V** - +5V **30V** - 10 to 30V* *only for A24HME1-F with HTL output signals	**0,5** - 0,5 m **01** - 1 m **02** - 2 m	**W** - without connector **C12** - round, 12 pins **D9** - flat, 9 pins

ORDER EXAMPLES: 1) A24HME1-F-2500-05V-01/W
2) A24HME1-F-10000-30V-02/C12