PHOTOELECTRIC ROTARY ENCODER

AK50

Absolute Encoder

Photoelectric absolute rotary encoder AK50 is manufactured containing up to 8 bit resolution via Gray, binary or other custom code output. It uses photoelectric technology and provides the user with an ability to set arbitrary reference position accessible via switch of up to 256 indexed positions.

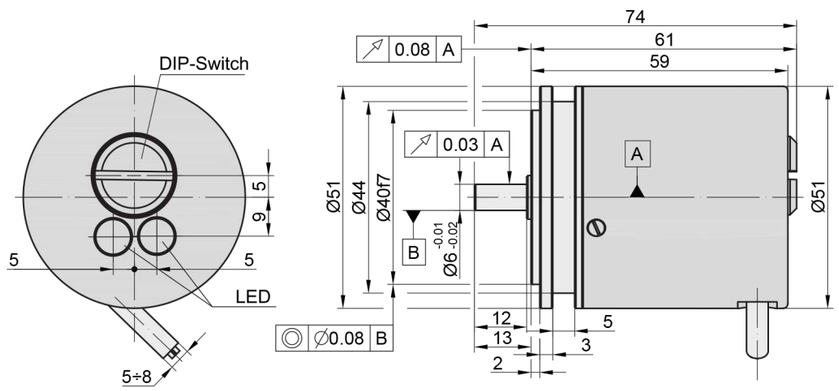

MECHANICAL DATA

Maximum shaft speed without counting loss for 8 bit	3000 rpm
Maximum shaft load: - axial - radial (at shaft end)	 80 N 100 N
Starting torque at 20 °C	3 Ncm
Rotor moment of inertia	20 gcm²
Protection (IEC 529): - housing - shaft	 IP66 IP65
Maximum weight without cable	0.3 kg

Operating temperature	-20...+80 °C
Storage temperature	-30...+90 °C
Maximum humidity (non-condensing)	98 %
Permissible vibration (55 to 2000 Hz)	≤ 100 m/s²
Permissible shock (11 ms)	≤ 1000 m/s²

ACCESSORIES

CONNECTORS FOR CABLE	B12 12-pin round connector	C9 9-pin round connector	C12 12-pin round connector	D9 9-pin flat connector	D15 15-pin flat connector	RS10 10-pin round connector	ONC 10-pin round connector
COUPLING	SC30						

ELECTRICAL DATA

Accuracy	±120 arc. sec
Resolution	2⁸ (256)
Code:	Gray, Binary
Output signals interface	Parallel
Light source	LED
Supply voltage: - standard - optional	 +24 (8...25) V± 5% +5 V± 5%
Maximum supply current	50 mA
Output signal levels	TTL/HTL
Maximum cable length	25 m

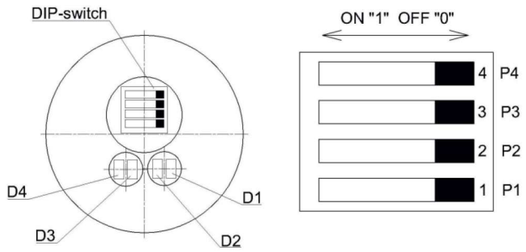

P1, P2, P3, P4 - operating mode and first setting switches;
D1 - green LED for indication of counting origin on code disc;
D2 - yellow LED for indication of specified counting origin;
D3 - red LED for indication of encoder failure:
- incorrect supply voltage,
- counting error,
- LED failure;
D4 - green LED for indication of proper encoder operating

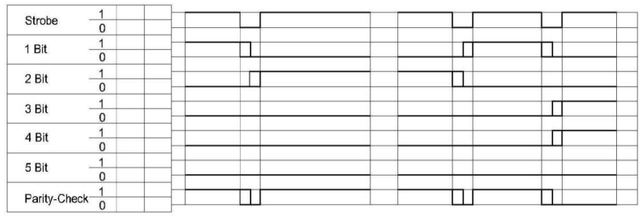

Switches position depending on tool number in tool changer

Tool number in tool changer	Switch P1 position	Switch P2 position
8	0	0
12	0	1
16	1	0
24	1	1

Encoder code full truth table (24 positions)

Function	Indexing position of turret																							
	1	2	3	4	5	6	7	8	9	10	11	12	13	14	15	16	17	18	19	20	21	22	23	24
Strobe	1	1	1	1	1	1	1	1	1	1	1	1	1	1	1	1	1	1	1	1	1	1	1	1
1 Bit	1	0	1	0	1	0	1	0	1	0	1	0	1	0	1	0	1	0	1	0	1	0	1	0
2 Bit	0	1	1	0	0	1	1	0	0	1	1	0	0	1	1	0	0	1	1	0	0	1	1	0
3 Bit	0	0	0	1	1	1	1	0	0	0	0	1	1	1	1	0	0	0	0	1	1	1	1	0
4 Bit	0	0	0	0	0	0	0	1	1	1	1	1	1	1	1	0	0	0	0	0	0	0	0	1
5 Bit	0	0	0	0	0	0	0	0	0	0	0	0	0	0	0	1	1	1	1	1	1	1	1	1
Parity-check	1	1	0	1	0	0	1	1	0	0	1	0	1	1	0	1	0	0	1	0	1	1	0	0

ORDER FORM

AK50 - X1 - X2/X3 - X4 - X5 - X6/X7

Configuration type (X1):	Number of positions* (X2):	(Or) nummber of bits* (X3):	Output code (X4):	Supply voltage (X5):	Cable length (X6):	Connector type (X7):
P - POSITION NUMBER **B** - BIT NUMBER	**2** ... **256** *only for AK50-P	**1** **2** ... **8** *only for AK50-B	**G** - gray **B** - binary	**05V** - +5V **24V** - +(8....25)V	**AR01** - 1m **AR02** - 2m **AR03** - 3m ...	**W** - without connector **B12** - round, 12 pins **C9** -round, 9 pins **C12** - round, 12 pins **D9** - flat, 9 pins **D15** - flat, 15 pins **RS10** - round, 10 pins **ONC** - round, 10 pins

ORDER EXAMPLES:
1) AK50-P-8/12/16/24-G-24V-AR01/W
2) AK50-B-8-G-05V-AR02/W
3) AK50-P-16/32-B-05V-AR12/C12
4) AK50-B-5/6/8-G-24V-AR06/W